[illegible]1 —[illegible]

[illegible]F_1[illegible] YyRr [illegible]F_2[illegible]

[illegible]（　　）　　**D**

A. F_1[illegible] 1:1:1:1

B. F_1[illegible] YR [illegible] YR [illegible] 1:1

C. [illegible]F_1[illegible] 4 [illegible]

D. F_1[illegible] YR [illegible] yr [illegible] 1:1

[illegible]1 —[illegible]

[illegible]

[illegible]

[illegible]12[illegible]4[illegible]2[illegible]
[illegible]1[illegible]1[illegible]4
[illegible]3[illegible]

[illegible]1[illegible]×[illegible]F_1[illegible]F_2[illegible] = 9 [illegible]
6 [illegible]1

[illegible]2[illegible]×[illegible]F_1[illegible]F_2[illegible] = 9 [illegible]
6 [illegible]1

[illegible]3[illegible]F_1[illegible]
[illegible]1[illegible]2 [illegible]1[illegible]

[illegible]1[illegible] 2

[illegible]

[illegible]2[illegible]A[illegible]a[illegible]

A[illegible]a[illegible]B[illegible]b[illegible]

aaBB aaBb AAbb

[illegible]

Aabb

AaBB AABB AABb

[illegible]

aabb AaBb

[illegible] 3 [illegible] 1 [illegible] 1 [illegible]
[illegible] F_2 [illegible] F_2 [illegible]

[illegible]
[illegible] 1/9 [illegible] F_3 [illegible]
F_3 [illegible] = 1 [illegible] 1 4/9 [illegible]
F_3 [illegible]

4/9

[illegible] : [illegible] =1:2:1

[illegible]2 —[illegible]

1. [illegible]
2. [illegible]
3. [illegible]

[illegible]A[illegible]a[illegible]T[illegible]t[illegible]D[illegible]① AATTdd ②AAttDD ③AAttdd ④aattdd [illegible]

[illegible]

[illegible]

1. [illegible]

2. [illegible] ([illegible]) [illegible]

3. [illegible]

□3 —□□□□□□□

- □□□□□□□□□□□□□□□□□□A□B□□□
  - 9:3:3:1
  - 1:1:1:1
  - 3:3:1:1
  - 3:1:0:0
  - 1:1:0:0

AaBb×AaB

AaBb×aabb□

AaBb×Aabb□

(3:1)x1□AABbx___Bb□

(1:1)x1□AABbx___bb□

AaBBxaa___

[illegible]

[illegible]E/e[illegible]F/f[illegible], [illegible]E[illegible]F[illegible]

[illegible] (　　　　)

P[illegible] [illegible] × [illegible]

↓

F1[illegible] 3/8[illegible] 5/8[illegible]

♀AaBbCc×♂ AaBbcc [illegible]

[illegible]__[illegible] 8

[illegible]__[illegible] 4

[illegible]__[illegible] 32 [illegible]______[illegible] 7/8

[illegible]__[illegible] 18 [illegible]_____[illegible] 3/4

[illegible]____________________[illegible] (1[illegible]2[illegible]1)(1[illegible]2[illegible]1)(1[illegible]1)

[illegible]__[illegible] 8 [illegible]_____[illegible] 7/16

[illegible]____________________[illegible] (3[illegible]1) (3[illegible]1) (1[illegible]1)

[illegible] A [illegible] a [illegible] B [illegible] b ;C [illegible] c …… [illegible] , [illegible]

[illegible] A_B_C_... [illegible] 4 [illegible]

[illegible]

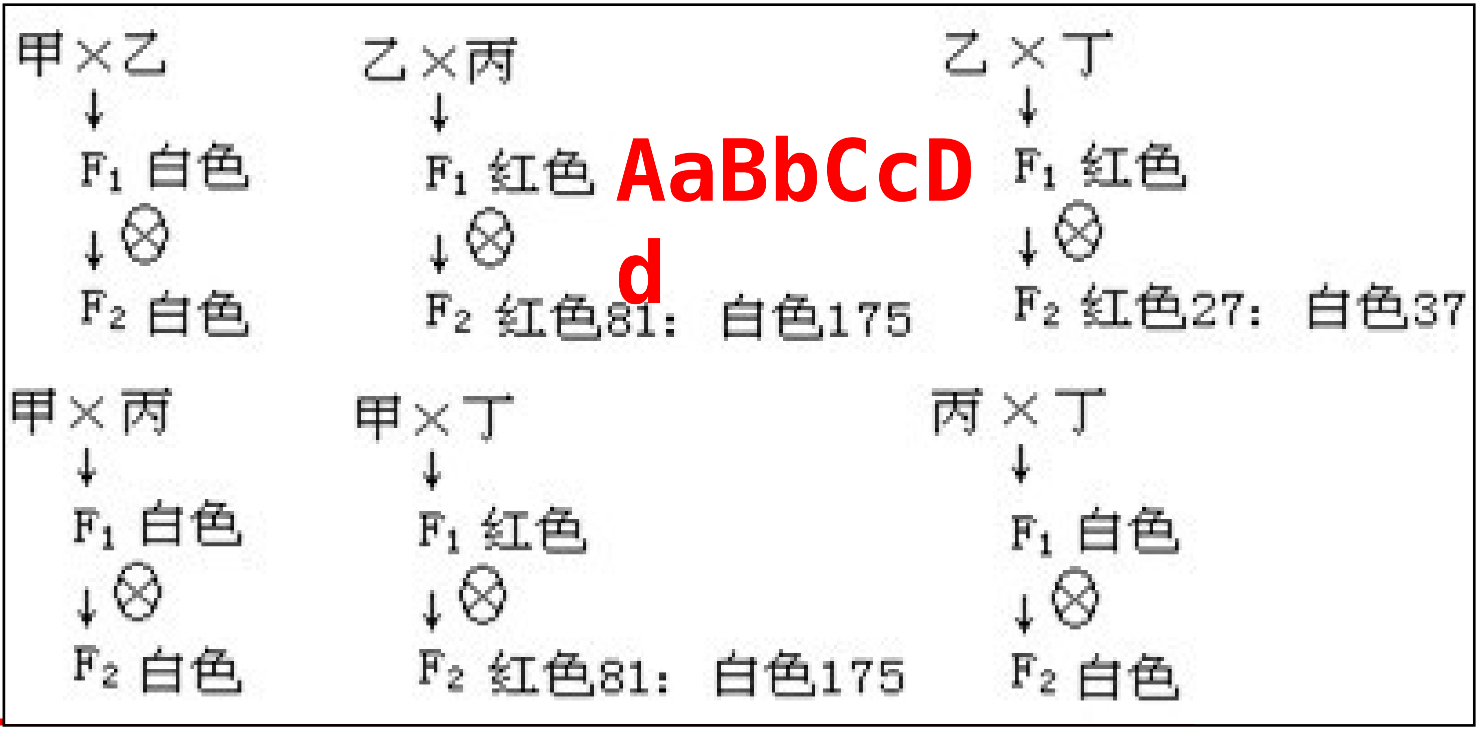

AaBbCcD
d

(1) [illegible] ______

(2) [illegible] ______ [illegible]

[illegible]

4

[illegible] [illegible]

- [illegible] 1 [illegible] [illegible] 3

[illegible]5 —[illegible]

[illegible] 1. [illegible] A [illegible] B [illegible] F1 [illegible] F1 [illegible] F2 [illegible]

2. [illegible] AaBb [illegible]?

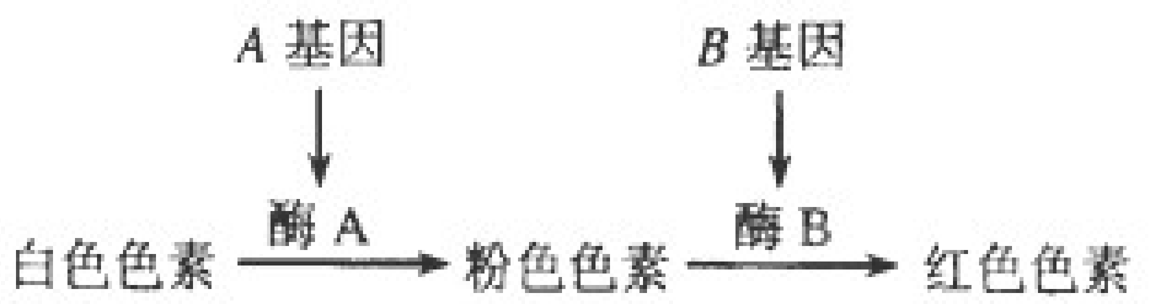

图 11

[illegible]5 —[illegible]

[illegible]

[illegible] X [illegible]
[illegible] 1 [illegible] 3 [illegible]

[illegible] X [illegible] F_1 : [illegible] =9:7 [illegible] F_1 [illegible]

[illegible] =3 [illegible] 1 [illegible]

F1 [illegible] =15:1

[illegible]5 —[illegible]

[illegible]	[illegible]	[illegible]
[illegible] A [illegible] B [illegible]	9:6:1	1:2:1
A [illegible] B [illegible]	9:7	1:3
aa [illegible]	9:3:4	1:1:2
[illegible]	15 : 1	3 : 1
[illegible]	1:4:6:4:1	1[illegible]2[illegible]1
[illegible]	4:2:2:1	1:1:1:1

[illegible] 5 —[illegible]

2. [illegible] F1 [illegible]
F1 [illegible] F2 [illegible] 272 [illegible] 212 [illegible]
[illegible] F1 [illegible] 101 [illegible] 302 [illegible]
[illegible] [illegible]

A. F2 [illegible]

B. F2 [illegible] 2 [illegible]

C. [illegible]

D. F2 [illegible]

D

[illegible]5 —[illegible]

3. [illegible]

[illegible]Y[illegible]y[illegible]D[illegible]d[illegible]F1[illegible]=4[illegible]2[illegible]2[illegible]1[illegible]

A. [illegible]YyDd

B. F1[illegible]YyDd

C. F1[illegible]

D. F1[illegible]Yydd[illegible]yyDd

C

[illegible]6:3:2:1[illegible]F1[illegible] YYdd[illegible]Yydd

[illegible]

4. [illegible] =5:3:3:1 [illegible]

A. [illegible]

B. [illegible]

C. [illegible] F_1 [illegible] 3/5

D. [illegible]

D

5. [illegible] E [illegible] e [illegible] F [illegible] f [illegible] E_ff [illegible]
eeF_ [illegible] . [illegible]♀[illegible]♂[illegible] F_1 [illegible] F_2 [illegible] F_2 [illegible]
[illegible] =7 [illegible] 3 [illegible] 1 [illegible] 1 [illegible]

[illegible] F_2 [illegible]
[illegible] F_1 [illegible] F_1
[illegible]
______ [illegible] ______ [illegible] [illegible]

Ef

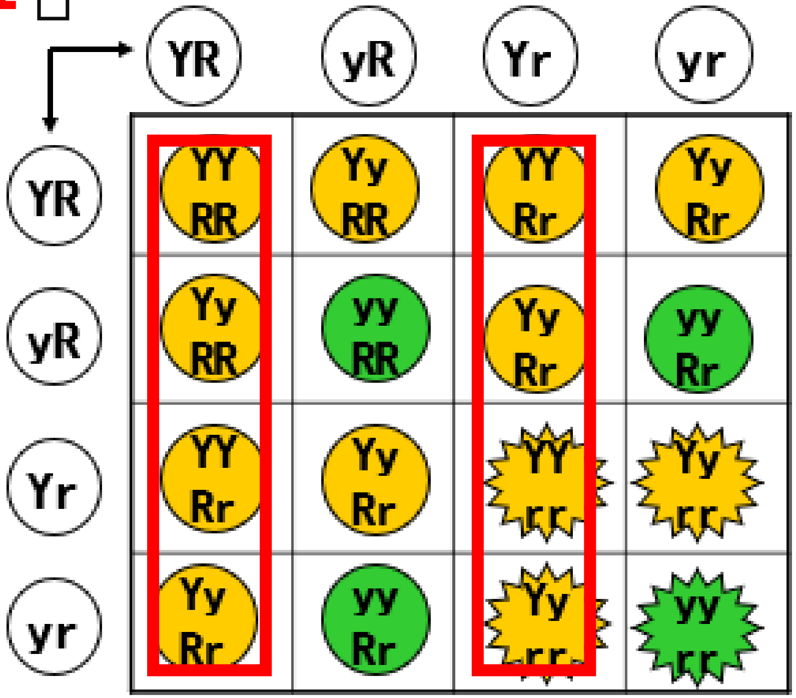

□5 —□□□□□□□□□□□

5.□2017□□150g□270g□□□□□□□□□□□□□□□□□F_1□□□□190g□□□□□□□□□（　　）

A.　3 / 64　　　　B.　5 / 64

C.　12 / 64　　　D.　15 / 64

D

□□□□□□□□□□□□□□□□□□□□□□AAbbcc□□□□□□□□□□170□210g□□□□□□□□□

______________________________□

aaBbCc□AaBbcc□AabbCc

[illegible]

1 [illegible]

[illegible]

[illegible] [illegible] **D** [illegible] **,** [illegible] **T** [illegible] [illegible] **d** [illegible] **t** [illegible]

[illegible]

—— [illegible] F_2 [illegible]

[illegible]

[illegible]

[illegible] / [illegible]

例6——[illegible]

2[illegible]—[illegible]

1. [illegible]T[illegible]t[illegible]a[illegible]A[illegible]
[illegible]
[illegible]
[illegible]

/8　　　　1/2　　　　1/

2. [illegible]
[illegible]

4/9　　　　1/18

1/2